DRAIN INSTALLATION INSTRUCTIONS

CAUTION: MAKE SURE THE TUB FLOOR DRAIN LOCATION IS MARKED

1

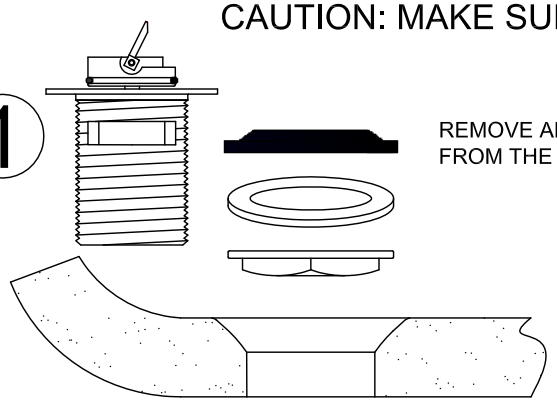

REMOVE ALL PARTS FROM THE DRAIN

2

APPLY A SMALL BEAD OF PLUMBERS PUTTY OR SILICONE AROUND THE GROOVE IN TUB

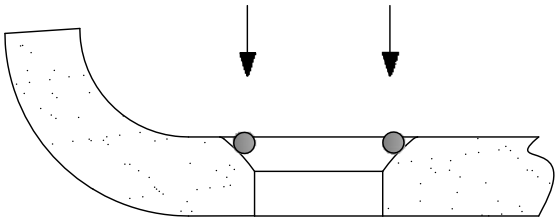

3

PUSH DRAIN INTO TUB HOLE.
CAUTION: REMOVE ANY PLUMBERS PUTTY OR SILICONE ON THE **DRAIN** AS THIS MAY CAUSE DAMAGE TO THE FINISH.

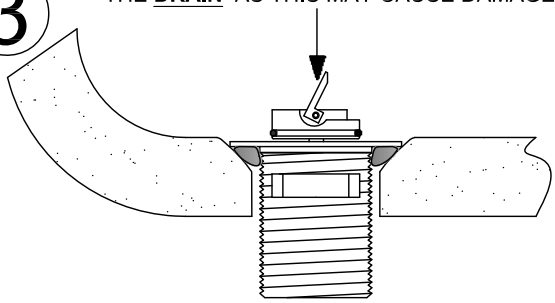

4

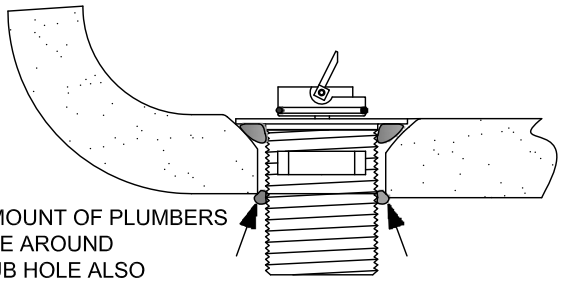

APPLY A SMALL AMOUNT OF PLUMBERS PUTTY OR SILICONE AROUND THE DRAIN AND TUB HOLE ALSO ON THE TOP OF THE MACK WASHER. THEN PUSH ON DRAIN BODY

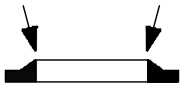

5

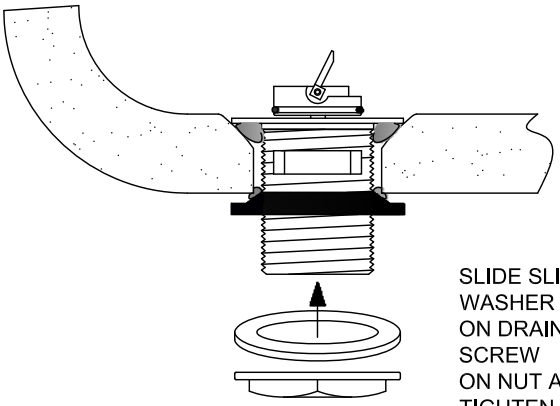

SLIDE SLIP WASHER ON DRAIN SCREW ON NUT AND TIGHTEN

6

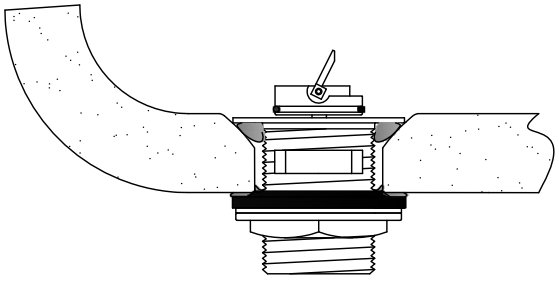

APPLY TEFLON TAPE OR THREAD SEALANT AND SCREW 1 1/2" BRASS TUBE INTO DRAIN BOTTOM

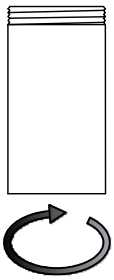

7

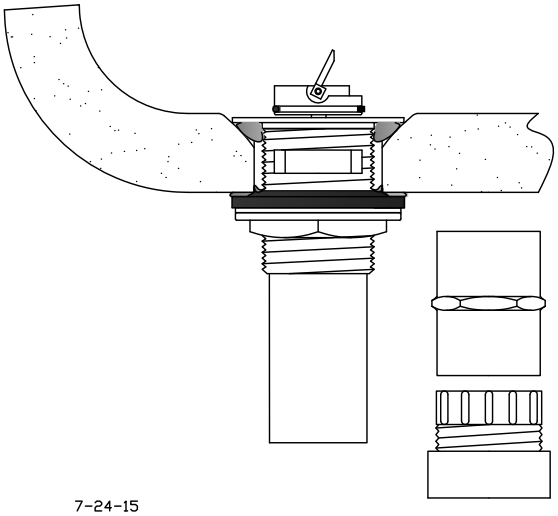

CONNECT 1 1/2" BRASS TUBE TO PVC, ABS OR BRASS PLUMBING. FITTINGS NOT SUPPLIED